REV.	ECN NO.	DATE
A-0	The new Release	2017.6.27
A-1	The new Release	2017.12.25
A-2	The new Release	2018.01.03
A-3	The new Release	2018.01.25
A-4	The new Release	2019.02.27

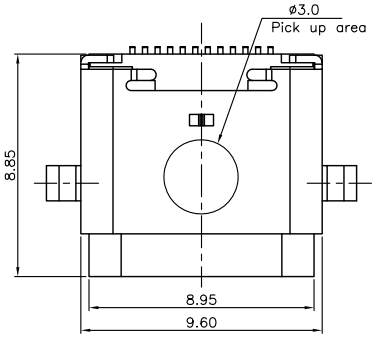

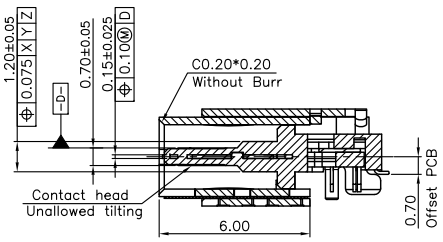

SECTION A–A
SECALE 1:1

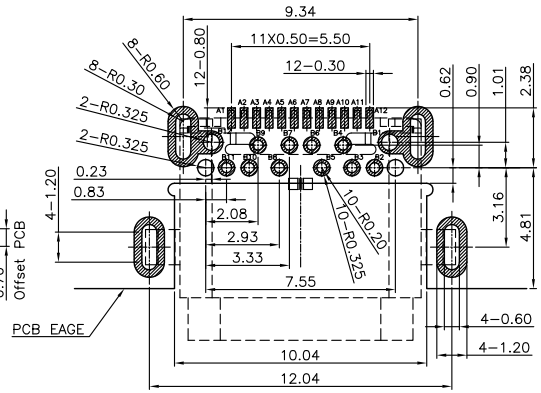

RECOMMEND P.C.B LAYOUT(COMPONENT SIDE)
TOLERANCE FOR PCB LAYOUT IS±0.05
KEEP OUT AREA (TOP VIEW)

NOTE:
1.ELECTRICAL CHARACTERISTICS;
1.1 CONTACT RESISTANCE: 40mΩ Max FOR INITIAL.
10mΩ CHANGE AFTER DURABILITY TEST
1.2 CONTACT CURRENT RATING: 5A
1.3 DIELECTRIC WITHSTANDING VOLTAGE: 100V AC R.M.S.
1.4 INSULATION RESISTANCE 100MΩ Min
1.5 OPERATING TEMPERATURE: −40°C ~ 80°C
2. MECHANICAL CHARACTERISTICS:
2.1 MATING FORCE: 5~20 N.
2.2 UNMATED FORCE: INITIAL 8~20N; 6~20N AFTER DURABILITY TEST
2.3 DURABILITY: 10,000 CYCLES

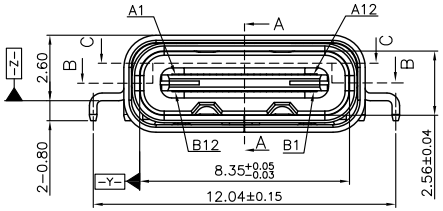

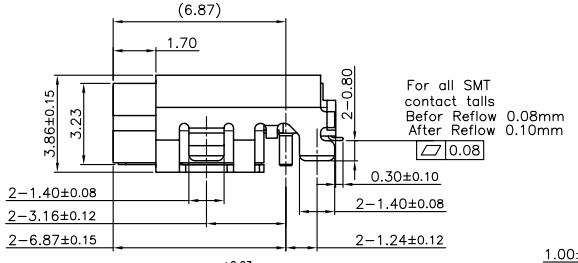

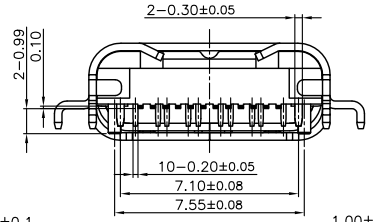

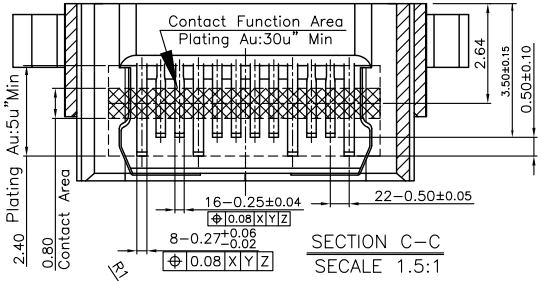

SECTION C–C
SECALE 1.5:1

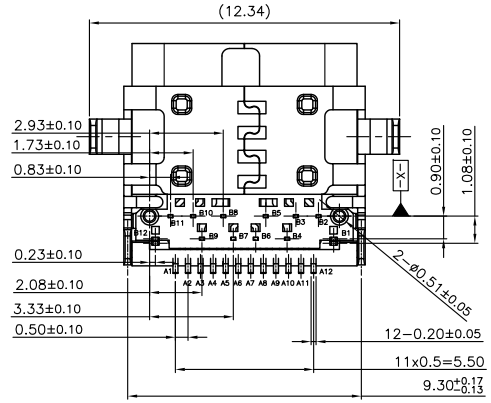

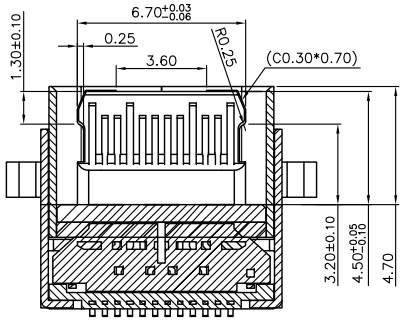

SECTION B–B
SECALE 1:1

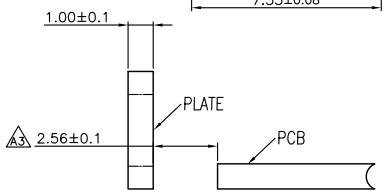

RECOMMEND PLATE AND PCB DISTANCE (TOLERANCES:±0.05)

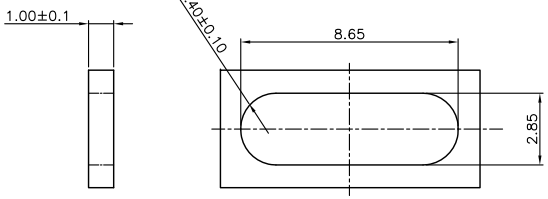

RECOMMEND PLATE HOLE AND THICKNESS (TOLERANCES:±0.15)

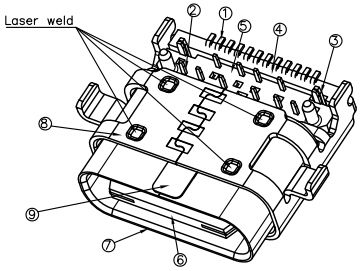

NO.	VARIETY	MATERIAL	QT,Y	REMARK
09	MYLAR		1	T=0.10 MM
08	OUT SHELL	SUS304	1	T=0.30 Plating nickel
07	IN SHELL	SUS304	1	T=0.30
06	OVER MOULDING	PA46 A4	1	White UL94 V-0
05	BOTTOM CONTACT I/M		1	White UL94 V-0
04	TOP CONTACT I/M		1	White UL94 V-0
03	SHIELDING PLATE	SUS301 H	1	T=0.15 Plating nickel
02	BOTTOM CONTACT	Copper alloy	1	T=0.12 Au 30u" Plated
01	TOP CONTACT	Copper alloy	1	T=0.12 Au 30u" Plated

RoHS Compliant

CZT® 温州意华接插件股份有限公司
WENZHOU YIHUA CONNECTOR CO., LTD

The third Angle of view

A4 SIZE	SCALE	UNIT	CUSTOMER:	Huawei
	1:1	mm	MODEL NO:	14080481

TOLERANCES
.X ±0.25
.XX±0.20
.XXX±0.10
ANGLES ±2°

Material:	SEE_NOTE	Designed:		NAME:	USB TYPE C FEMALE L=8.85 OFFEST PCB 0.70
Finish:	SEE_NOTE	Checked:		DWG NO:	131A-0025 REV.
SHEET 1 OF 1		Approved:		PART NO:	10317124F004 A-4